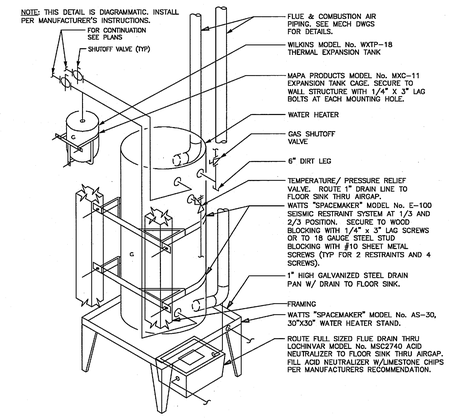

CONDENSING TYPE GAS WATER HEATER DETAIL | SCALE NONE | 10

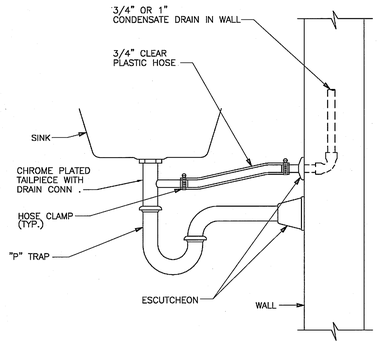

TAILPIECE CONNECTION | SCALE NONE | 7

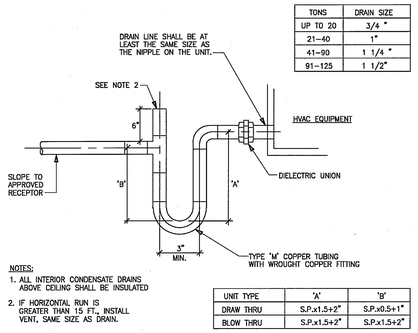

TONS	DRAIN SIZE
UP TO 20	3/4 "
21-40	1"
41-90	1 1/4 "
91-125	1 1/2"

NOTES:
1. ALL INTERIOR CONDENSATE DRAINS ABOVE CEILING SHALL BE INSULATED
2. IF HORIZONTAL RUN IS GREATER THAN 15 FT., INSTALL VENT, SAME SIZE AS DRAIN.

UNIT TYPE	'A'	'B'
DRAW THRU	S.P.x1.5+2"	S.P.x0.5+1"
BLOW THRU	S.P.x1.5+2"	S.P.x1.5+2"

S.P. = SYSTEM STATIC PRESSURE-INCHES

CONDENSATE DRAIN DETAIL | SCALE NONE | 4

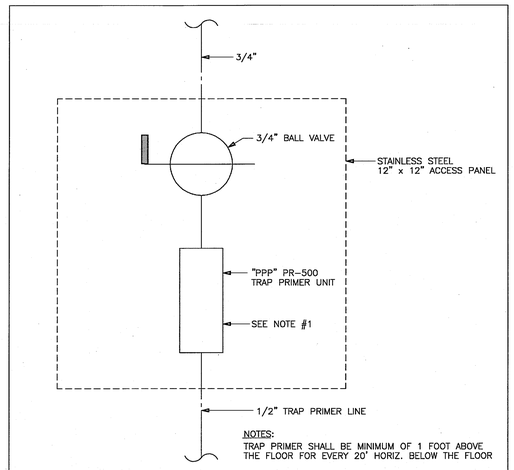

NOTES:
TRAP PRIMER SHALL BE MINIMUM OF 1 FOOT ABOVE THE FLOOR FOR EVERY 20' HORIZ. BELOW THE FLOOR

TRAP PRIMER DETAIL | SCALE NONE | 1

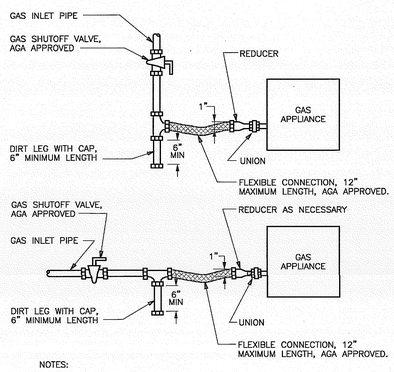

NOTES:
1. PAINT ALL GAS PIPING YELLOW.
2. DO NOT PAINT BRAIDED HOSE.

GAS EQUIPMENT CONNECTORS | SCALE NONE | 11

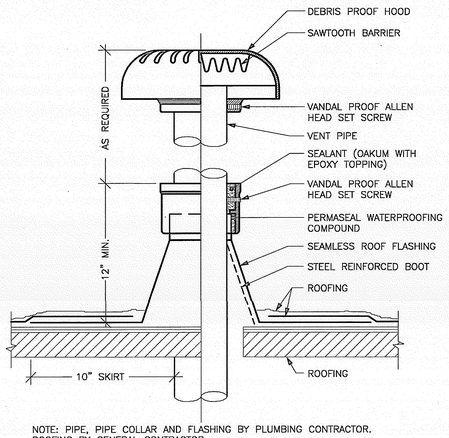

NOTE: PIPE, PIPE COLLAR AND FLASHING BY PLUMBING CONTRACTOR. ROOFING BY GENERAL CONTRACTOR.

VENT THROUGH ROOF DETAIL | SCALE NONE | 8

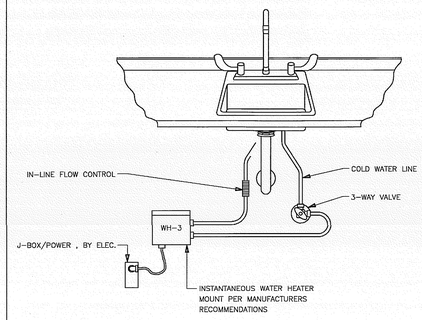

UNDERCOUNTER WATER HEATER DETAIL | SCALE NONE | 5

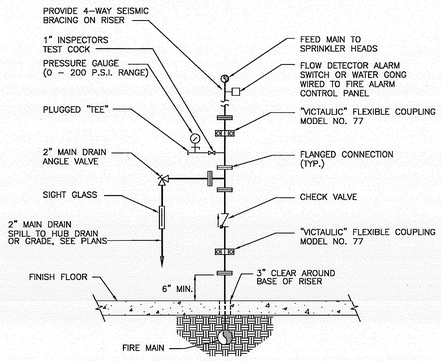

FIRE PROTECTION TO BE "DESIGN BUILD"
FIRE SPRINKLER INFORMATION IS NOT A PART OF MECHANICAL (PLUMBING) PLAN CHECK AND SHALL BE SUBMITTED TO THE ADMINISTRATIVE AUTHORITY HAVING JURISDICTION FOR SEPERATE APPROVAL AND PERMIT

FIRE RISER DETAIL | SCALE NONE | 2

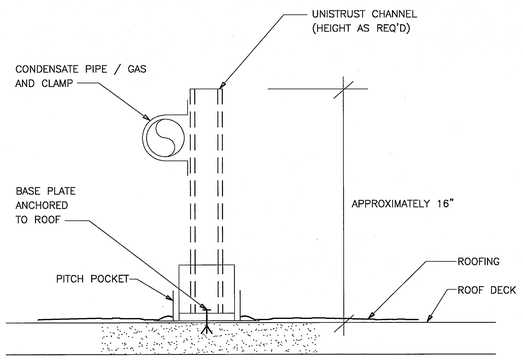

ROOF PIPING SUPPORT | SCALE NONE | 12

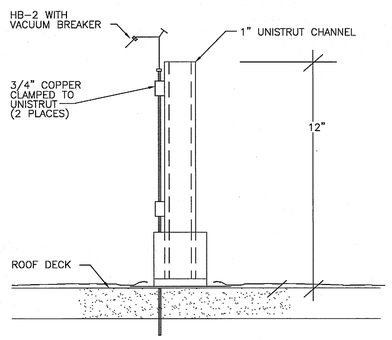

HOSE BIBB ON ROOF | SCALE NONE | 9

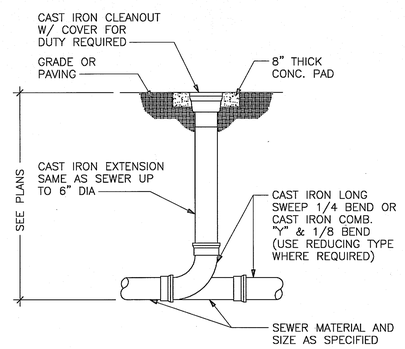

EXTERIOR CLEANOUT TO GRADE | SCALE NONE | 6

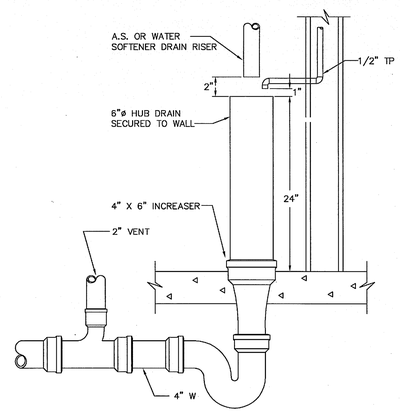

HUB DRAIN DETAIL | SCALE NONE | 3

MOORE IACOFANO GOLTSMAN, INC.
801 N. HARBOR BLVD. FULLERTON, CA 92831
TEL 714/871-3638 FAX 714/871-1188
www.migcom.com

PITASSI ARCHITECTS, INC.
8439 White Oak Ave., Suite. 105
Rancho Cucamonga, Ca 91730
Tel. 909-980-1361 ▪ Fax. 909-944-5814
e-mail. pjpaia@pitassiarchitects.com

CONSULTANT:
GLUMAC
16735 Von Karman Ave., Suite 250
Irvine, CA 92606-4905
T. 949.833.9190 F. 949.833.0252
www.glumac.com
Job No.: 408134PI
Contact: RG/AK
engineers for a sustainable future

PERRIS VALLEY Big League Dreams

2155 Trumble Road
Perris, California 92570

SHEET TITLE
PLUMBING DETAILS

100% CONSTRUCTION DOCUMENT

DATE	REVISIONS

STAMP

CHECKED BY	DATE
-	-

DATE 01-07-10	FILE NAME
DRAWN BY -	SHEET P-0.3
JOB NO. 05208.00	
SCALE	